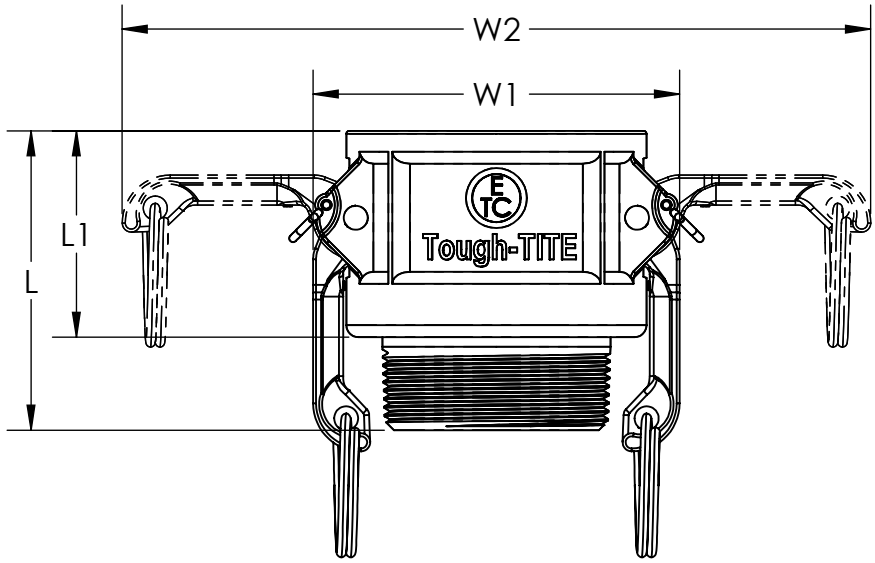

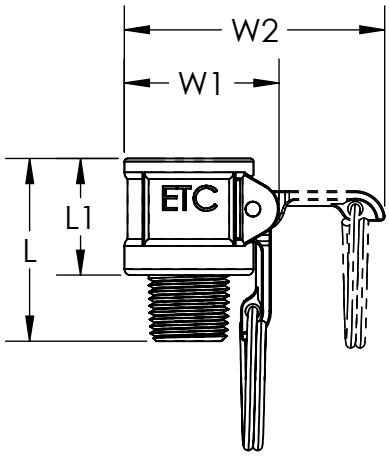

1/2" Only

NB	Part No.	L	L1	W1	W2	N	Mass
		(inches)				(number)	(lbs)
1/2"	3E05BSS	1.875	1.219	1.645	3.075	1	0.300
3/4"	3E07BSS	2.000	1.328	2.322	5.182	2	0.450
1"	3E10BSS	2.374	1.547	2.803	5.354	2	0.761
1.1/4"	3E12BSS	2.750	1.781	3.155	7.241	2	1.200
1.1/2"	3E15BSS	2.803	1.850	3.567	7.598	2	1.257
2"	3E20BSS	3.150	2.102	3.965	7.933	2	1.918
2.1/2"	3E25BSS	3.438	2.250	4.338	8.424	2	2.000
3"	3E30BSS	3.654	2.276	5.291	9.724	2	3.439
4"	3E40BSS	3.819	2.303	6.421	10.874	2	6.173
5"							
6"	3E60BSS	4.173	2.500	9.461	16.224	2	11.669
NB	Part No.	L	L1	W1	W2	N	Mass
		(mm)				(number)	(kg)
1/2"	3E05BSS	47.6	31.0	41.8	78.1	1	0.136
3/4"	3E07BSS	50.8	33.7	59.0	131.6	2	0.204
1"	3E10BSS	60.3	39.3	71.2	136.0	2	0.345
1.1/4"	3E12BSS	69.8	45.2	80.1	183.9	2	0.544
1.1/2"	3E15BSS	71.2	47.0	90.6	193.0	2	0.570
2"	3E20BSS	80.0	53.4	100.7	201.5	2	0.870
2.1/2"	3E25BSS	87.3	57.1	110.2	214.0	2	0.907
3"	3E30BSS	92.8	57.8	134.4	247.0	2	1.560
4"	3E40BSS	97.0	58.5	163.1	276.2	2	2.800
5"							
6"	3E60BSS	106.0	63.5	240.3	412.1	2	5.293

N=NUMBER OF HANDLES

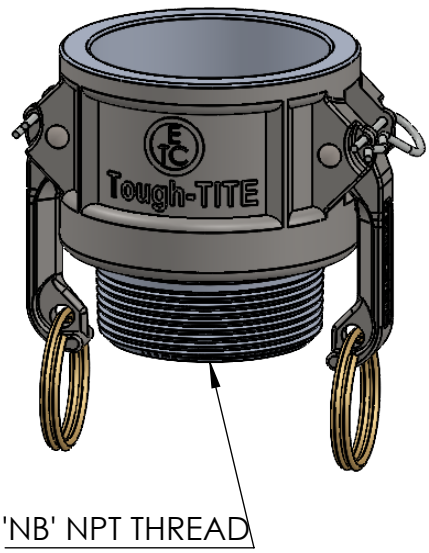

DIMENSIONALLY TO STANDARD A-A-59326-7 (FORMERLY MIL-C-27487G MS27026E) EXCEPT 1/2" AND 5"

apg. Tough-TITE
COUPLING PRODUCTS
5324 SOUTH NATIONAL DRIVE, KNOXVILLE, TN 37914 USA

REV.	DATE	REASON FOR ISSUANCE	BY
4			
3			
2			
1			

MATERIAL:
STAINLESS STEEL
(316) BODY
SS HANDLES
SS PINS
SS RINGS
NITRILE GASKET

WEIGHT: See table

DRAWN BY:	Stephen Adams
DATE DRAWN:	July 31st 2025
APPROVED BY:	Andy Heaton
DATE APPROVED:	July 31st 2025

APG RESERVE THE RIGHT TO UPDATE PRODUCTS WITHOUT NOTIFICATION

Part B Stainless Steel Coupling Half, Female by External NPT Pipe Thread (Type VII)
CUSTOMER DRAWING

SIZE: A4 | DWG: 3EXXBSS-CUST | REV 0

DO NOT SCALE DRAWING | SHEET 1 OF 1