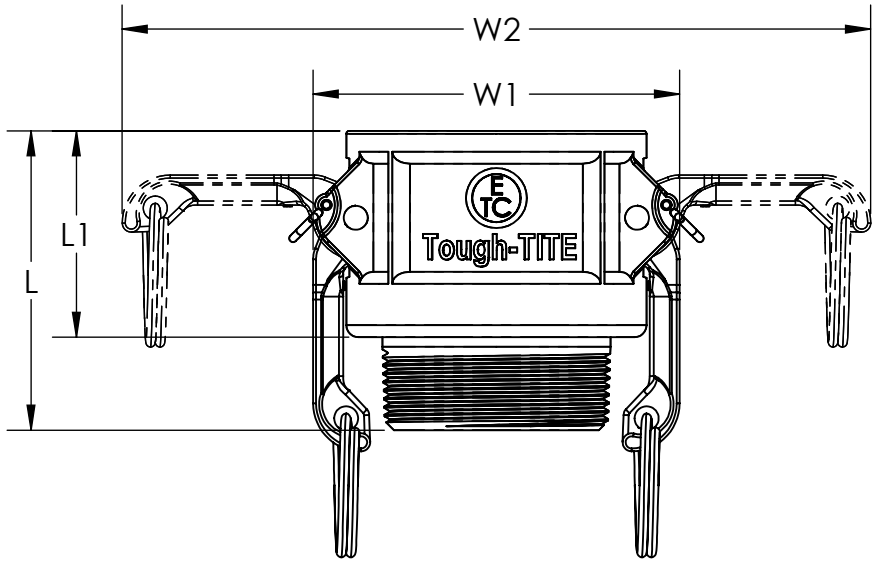

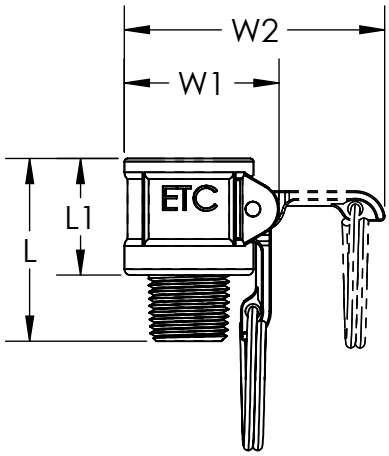

1/2" Only

NB	Part No.	L	L1	W1	W2	N	Mass
		(inches)				(number)	(lbs)
1/2"	3E05BAL						
3/4"	3E07BAL	2.000	1.219	2.344	5.182	2	0.15
1"	3E10BAL	2.392	1.563	2.469	5.271	2	0.39
1.1/4"	3E12BAL	2.750	1.750	3.170	7.256	2	0.61
1.1/2"	3E15BAL	2.750	1.875	3.468	7.554	2	0.70
2"	3E20BAL	3.125	2.156	3.835	7.921	2	0.95
2.1/2"	3E25BAL	3.400	2.125	4.338	8.424	2	0.70
3"	3E30BAL	3.516	2.219	5.495	9.959	2	1.87
4"	3E40BAL	3.875	2.234	6.598	11.062	2	2.58
5"	3E50BAL	3.740	2.330	7.880	11.750	2	2.65
6"	3E60BAL	4.330	2.550	10.000	15.750	2	3.21

NB	Part No.	L	L1	W1	W2	N	Mass
		(mm)				(number)	(kg)
1/2"	3E05BAL						
3/4"	3E07BAL	50.8	31.0	59.5	131.6	2	0.07
1"	3E10BAL	60.7	39.7	62.7	133.9	2	0.18
1.1/4"	3E12BAL	69.9	44.5	80.5	184.3	2	0.28
1.1/2"	3E15BAL	69.9	47.6	88.1	191.9	2	0.32
2"	3E20BAL	79.4	54.8	97.4	201.2	2	0.43
2.1/2"	3E25BAL	86.4	54.0	110.2	214.0	2	0.32
3"	3E30BAL	89.3	56.4	139.6	253.0	2	0.85
4"	3E40BAL	98.4	56.8	167.6	281.0	2	1.17
5"	3E50BAL	95.0	59.2	200.2	298.4	2	1.20
6"	3E60BAL	110.0	64.8	254.0	400.0	2	1.46

N=NUMBER OF HANDLES

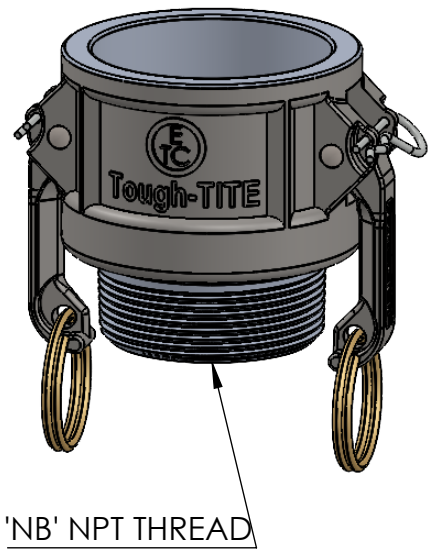

DIMENSIONALLY TO STANDARD A-A-59326-1 (FORMERLY MIL-C-27487G MS27020E) EXCEPT 1/2"

EVER-TITE AND TOUGH-TITE 1/2" COUPLINGS ARE NOT INTERCHANGEABLE

apg Tough-TITE
COUPLING PRODUCTS
5324 SOUTH NATIONAL DRIVE, KNOXVILLE, TN 37914 USA

REV.	DATE	REASON FOR ISSUANCE	BY
4			
3			
2			
1			

MATERIAL:
ALUMINUM BODY
BRASS HANDLES
SS PINS
PLATED STEEL RINGS
NITRILE GASKET

WEIGHT: See table

DRAWN BY:	Stephen Adams
DATE DRAWN:	July 6th 2025
APPROVED BY:	Andy Heaton
DATE APPROVED:	July 6th 2025

APG RESERVE THE RIGHT TO UPDATE PRODUCTS WITHOUT NOTIFICATION

Part B Aluminum Coupling Half, Female by External NPT Pipe Thread (Type VII)
CUSTOMER DRAWING

SIZE: A4 | DWG: 3EXXBAL-CUST | REV 0

DO NOT SCALE DRAWING | SHEET 1 OF 1