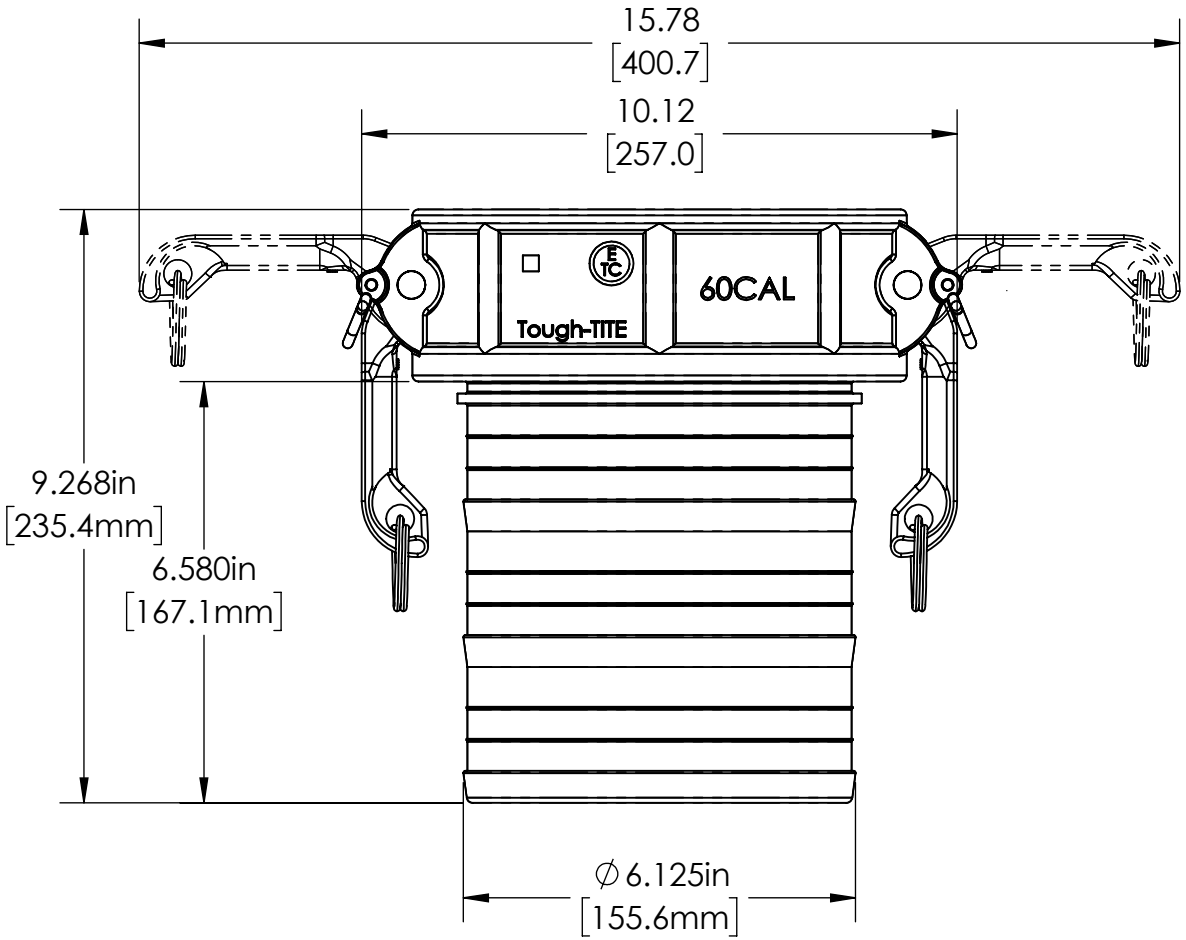


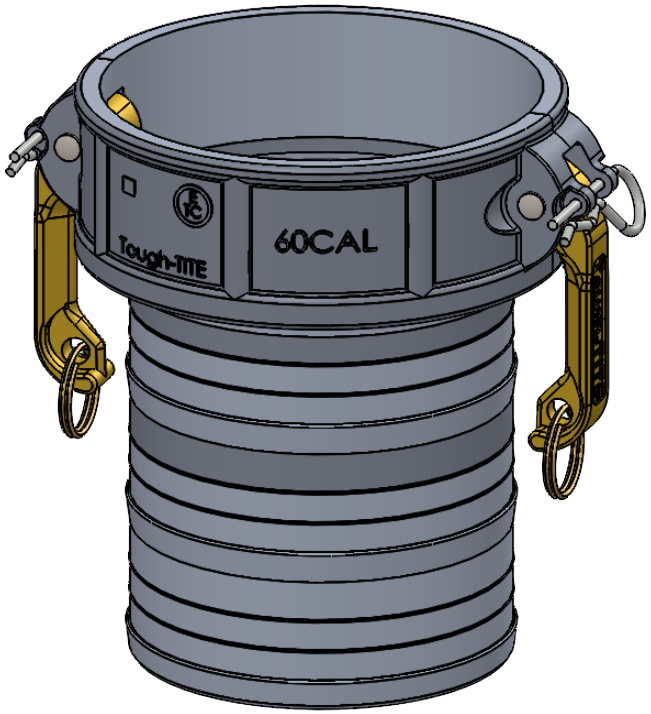


Dimensions to standard A-A-59326/6
(formerly MIL-C-27487G MS27025E)

APG RESERVE THE RIGHT TO UPDATE PRODUCTS WITHOUT NOTIFICATION

apg Tough-TITE
COUPLING PRODUCTS
5324 SOUTH NATIONAL DRIVE, KNOXVILLE, TN 37914 USA

| REV. | DATE | REASON FOR ISSUANCE | BY |
|---|---|---|---|
| 5 | | | |
| 4 | | | |
| 3 | | | |
| 2 | | | |
| 1 | | | |

**MATERIAL:**
ALUMINUM BODY
BRASS HANDLES
SS PINS
PLATED STEEL RINGS
NITRILE GASKET

WEIGHT: 7.42 lb 3.366 kg

**MACHINING TOLERANCES:**

| | |
|---|---|
| .X | ±.03 |
| .XX | ±.015 |
| .XXX | ±.005 |
| ANGULAR | ± 1° |
| RADII | 1/16" |

**UNLESS OTHERWISE SPECIFIED**
REMOVE ALL CASTING RESIDUE.
BREAK ALL SHARP EDGES.
DEBURR AFTER MACHINING.
THREADS ARE CLASS 2 FIT.
DRAFT ANGLE ≤ 2°
CONCENTRICITY WITHIN .005
CAST FINISH 125-250 RMS.
MACHINE FINISH 32-64 RMS.
ALL DIMENSIONS IN INCHES.

| | |
|---|---|
| DRAWN BY | Stephen Adams |
| DATE DRAWN: | October 23rd 2024 |
| APPROVED BY: | Andy Heaton |
| DATE APPROVED: | October 23rd 2024 |

INFORMATION ON THIS DRAWING IS CONFIDENTIAL. IT MAY NOT BE USED WITHOUT PRIOR WRITTEN CONSENT OF THE OWNER.

Part C Aluminum Coupling Half, Female
by Hose Shank (Type VI)
Customer Drawing.

SIZE: A4 | DWG: 3E60CAL-CUST | REV 0

SCALE: 1:4 | DO NOT SCALE DRAWING | SHEET 1 OF 1