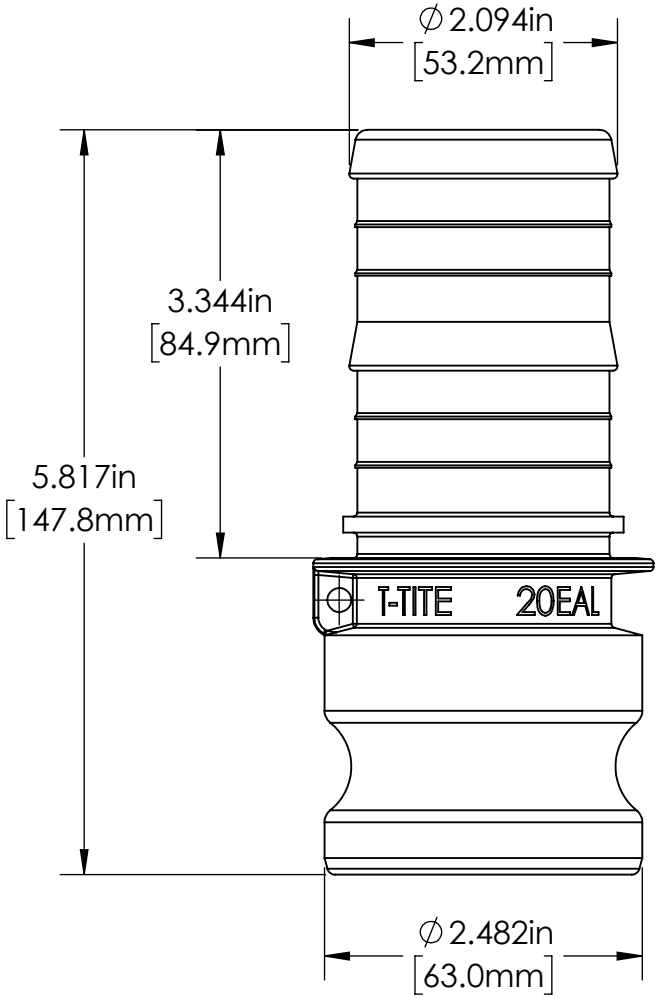

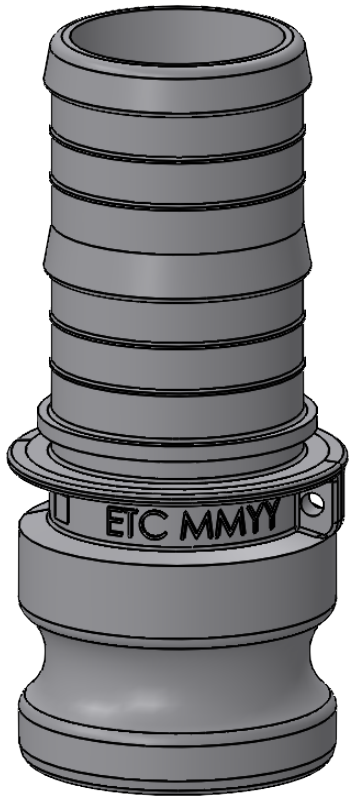

Dimensions to standard A-A-59326/2
(formerly MIL-C-27487G MS27021E)

APG RESERVE THE RIGHT TO UPDATE PRODUCTS WITHOUT NOTIFICATION

apg Tough-TITE
COUPLING PRODUCTS
5324 SOUTH NATIONAL DRIVE, KNOXVILLE, TN 37914 USA

REV.	DATE	REASON FOR ISSUANCE	BY
5			
4			
3			
2			
1			

MATERIAL:
ALUMINUM BODY

WEIGHT: 0.860 lb 0.390 kg

MACHINING TOLERANCES:

.X	±.03
.XX	±.015
.XXX	±.005
ANGULAR	± 1°
RADII	1/16"

UNLESS OTHERWISE SPECIFIED
REMOVE ALL CASTING RESIDUE.
BREAK ALL SHARP EDGES.
DEBURR AFTER MACHINING.
THREADS ARE CLASS 2 FIT.
DRAFT ANGLE ≤ 2°
CONCENTRICITY WITHIN .005
CAST FINISH 125-250 RMS.
MACHINE FINISH 32-64 RMS.
ALL DIMENSIONS IN INCHES.

DRAWN BY	Stephen Adams
DATE DRAWN:	October 12th 2024
APPROVED BY:	Andy Heaton
DATE APPROVED:	October 12th 2024

INFORMATION ON THIS DRAWING IS CONFIDENTIAL. IT MAY NOT BE USED WITHOUT PRIOR WRITTEN CONSENT OF THE OWNER.

Part E Aluminum Coupling Half, Male
by Hose Shank (Type II)
Customer Drawing.

SIZE: A4 | DWG: 3E20EAL-CUST | REV 0

SCALE: 1:4 | DO NOT SCALE DRAWING | SHEET 1 OF 1